Insert locks

# SIXTYSET

https://www.locinox.com/en-gb/gate-hardware/locks/insert-locks/d00000023

Complete Sixtylock set to equip your metal, PVC or aluminium gates with a 10 mm adjustable, stainless steel insert lock and keep. A safe anchoring of the gate is guaranteed. With handles, stainless steel or polyamide cover shields and 70 mm cylinder.

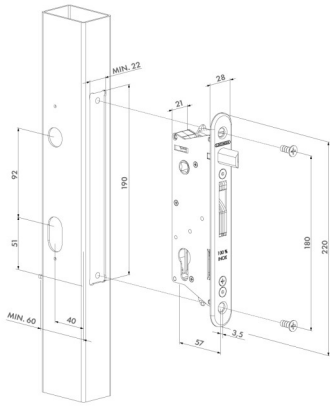


## TECHNICAL SPECIFICATIONS