Industrial gates

EXCENTRO

https://www.locinox.com/en-gb/gate-hardware/hinges/industrial-gates/p00008959

This hinge is the perfect solution for sloped driveways. The hinge opens in an upward movement inwards, allowing a perfect entry and exit on even the steepest slopes (from 2% up to 35%). Modular for gates with a Locinox GBMU4D-M16 preparation.

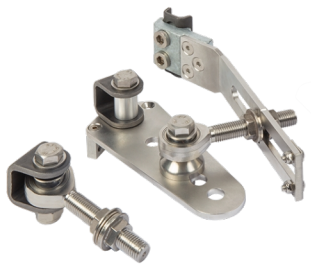

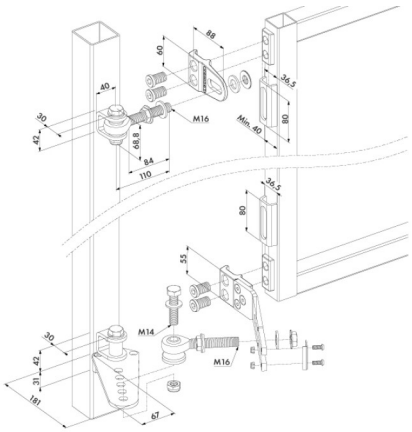

TECHNICAL SPECIFICATIONS

Left-Right Adjustability	Yes
Minimal Distance Gate - Post	35 mm
Gate Weight	75 kg
Horizontal Adjustability	53 mm
Vertical Adjustability	19 mm
Materials Main Part(s)	Aluminium
	Hot Dip Galvanised Steel
	Stainless Steel
Hours of Salt Spray Testing	500
Test Frequency	500000
Years of Warranty	3